61e ‘‘The missing Module’’

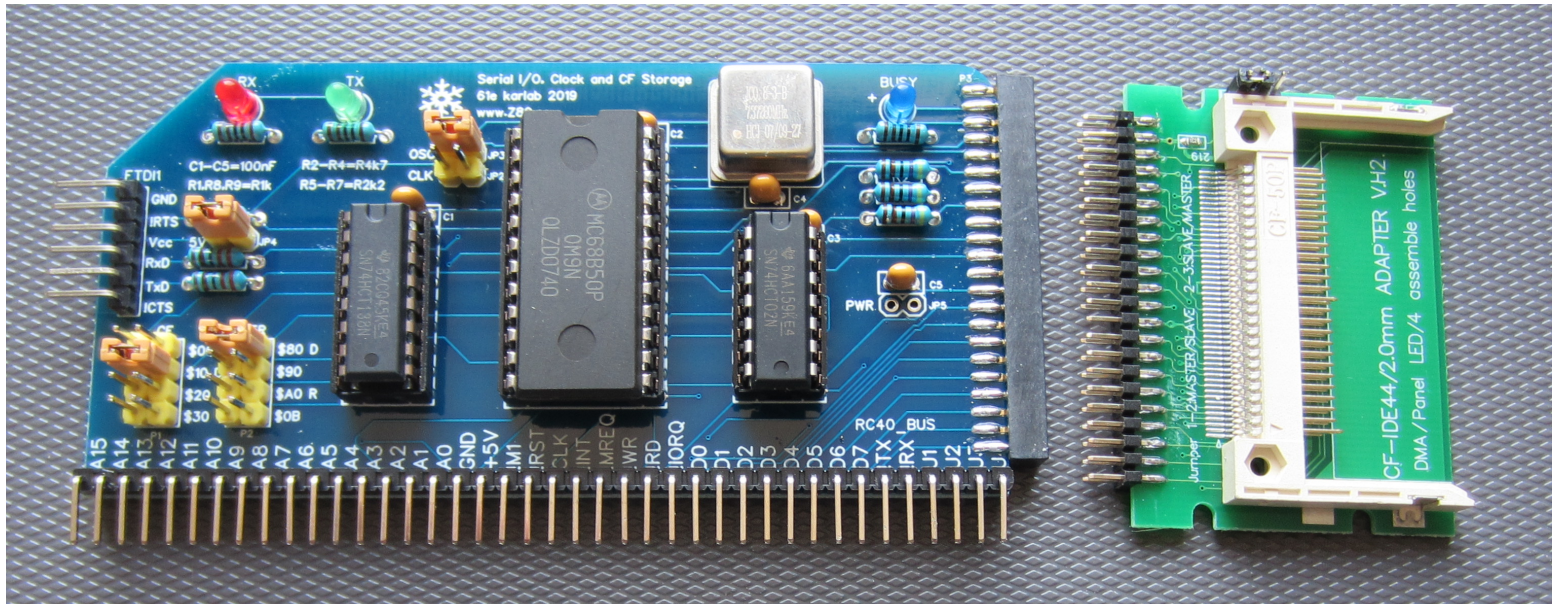

www.Z80.no

Karl Albert Brokstad

Components for #61e full kit.
The upgrade kit do not contain the MC68B50P ACIA.

1x PCB – 61e - design files can be freely downloaded from EasyEDA.com

1x MC68B50P ACIA
1x 74HCT138
1x 74HCT02

1x DIP-24 socket
1x DIP16 socket
1x DIP-14 socket

1x Compact Flash 44pin IDE adaptor
1x Crystal Oscillator rec. 7.3728 Mhz

5x 100nF capacitors (104)
2x 330 resistors
1x 1k resistor
3x 2k2 resistors
3x 4k7 resistors
3x LEDs

1x 44pin IDE connector
1x 40 pin angled male connector
1x 6 pin angled male connector
4x 4 pin straight male connector
3x 2 pin straight male connector
4x jumpers

1x 128MB CF memory card (optional)

1

Open the package.

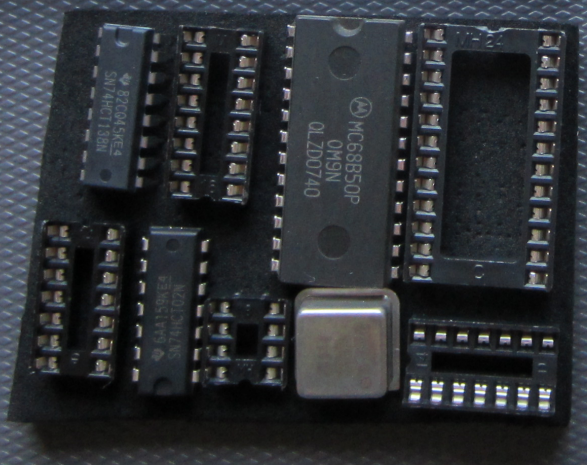

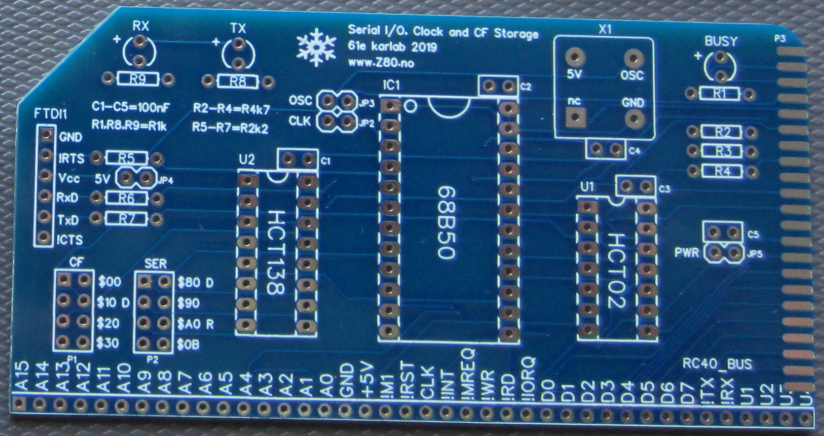

2

Check all components are present and not damaged.

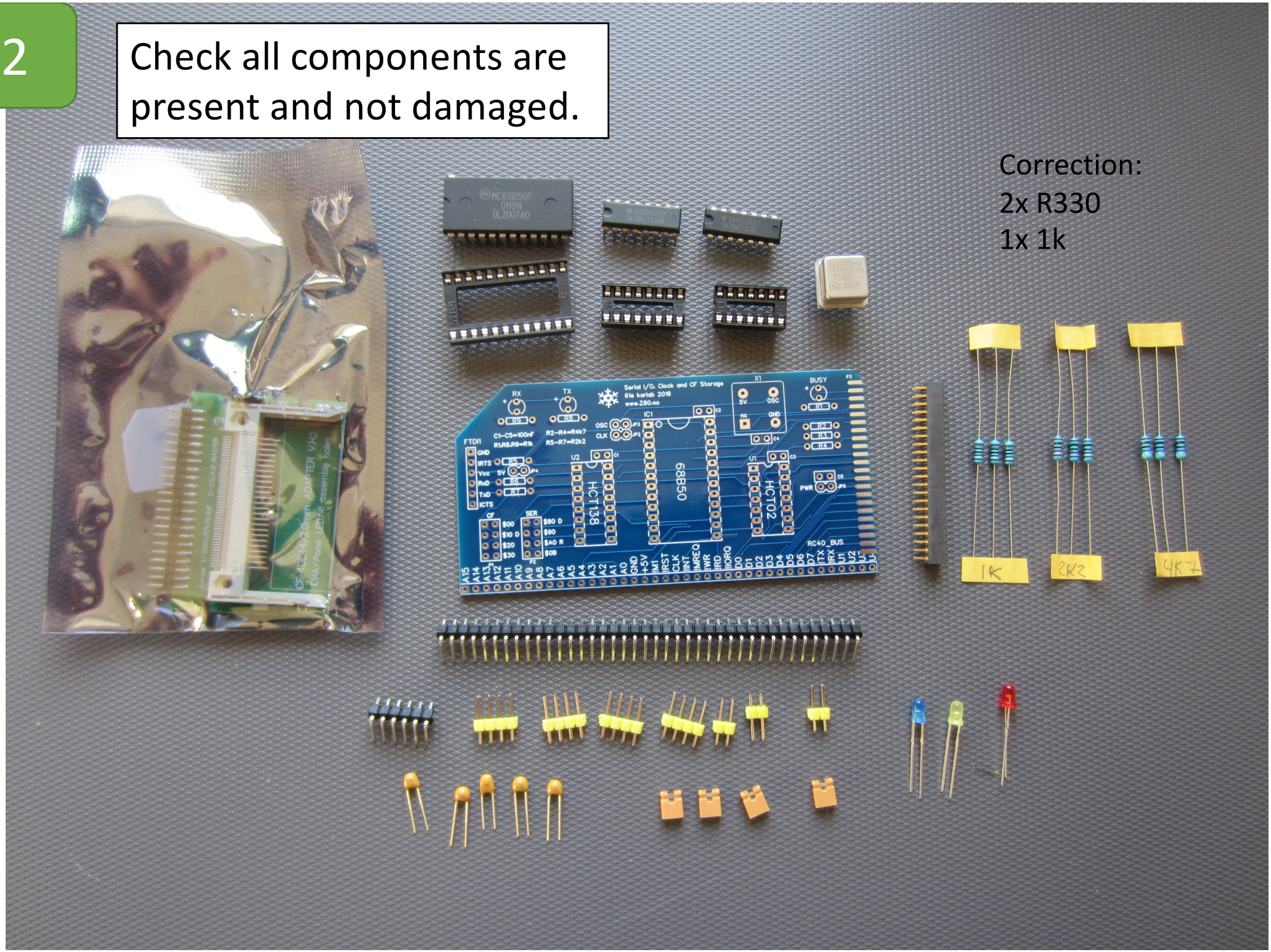

3

Align the 2x22pin female connector on to the right edge connector.

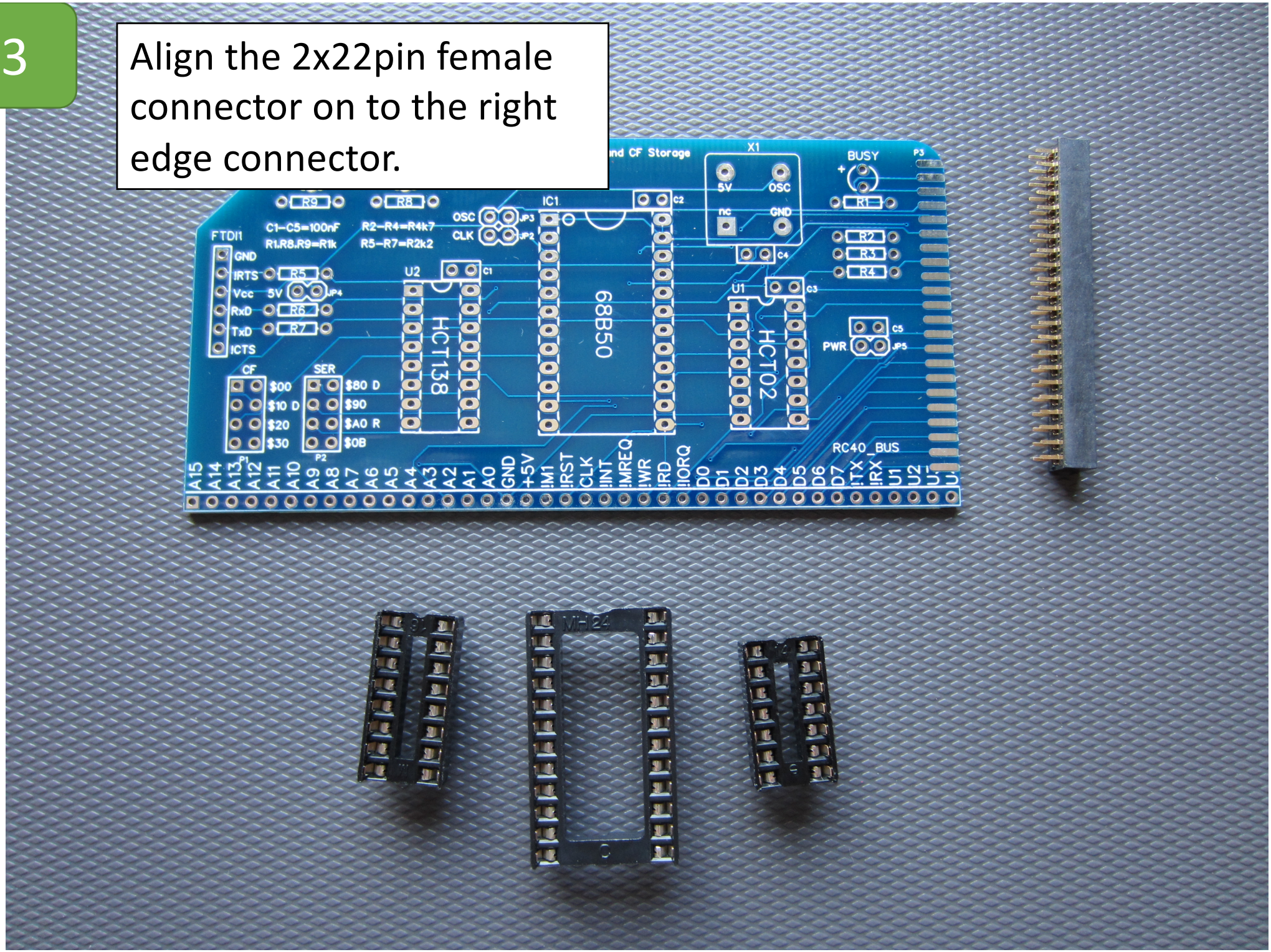

4

Solder one pad and check that the connector still aligns to the edge connector, the solder the rest of the pads.

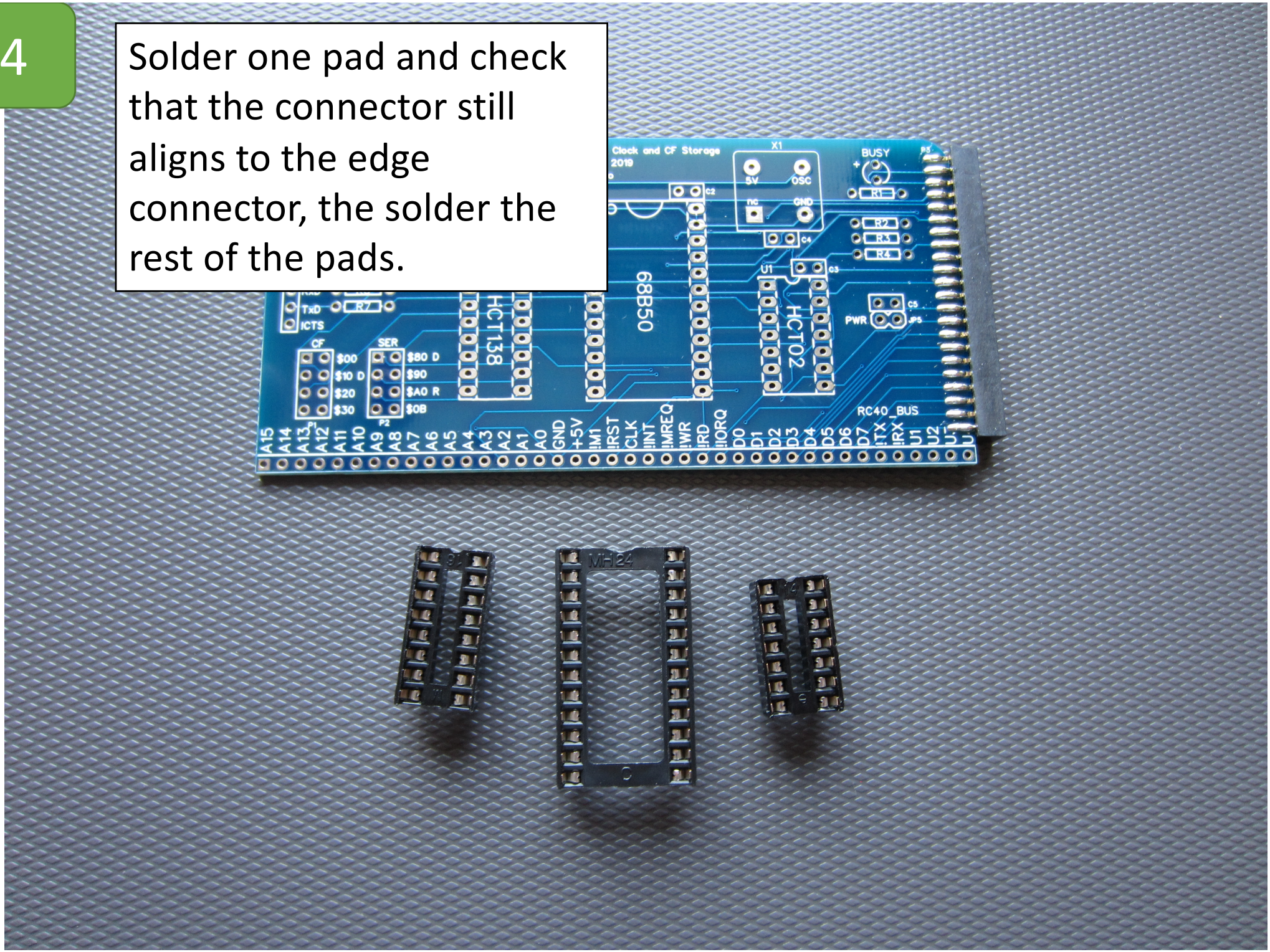

5

Place the IC sockets on the board. There is a notch on the sockets which should point up. Secure the sockets with some tape.

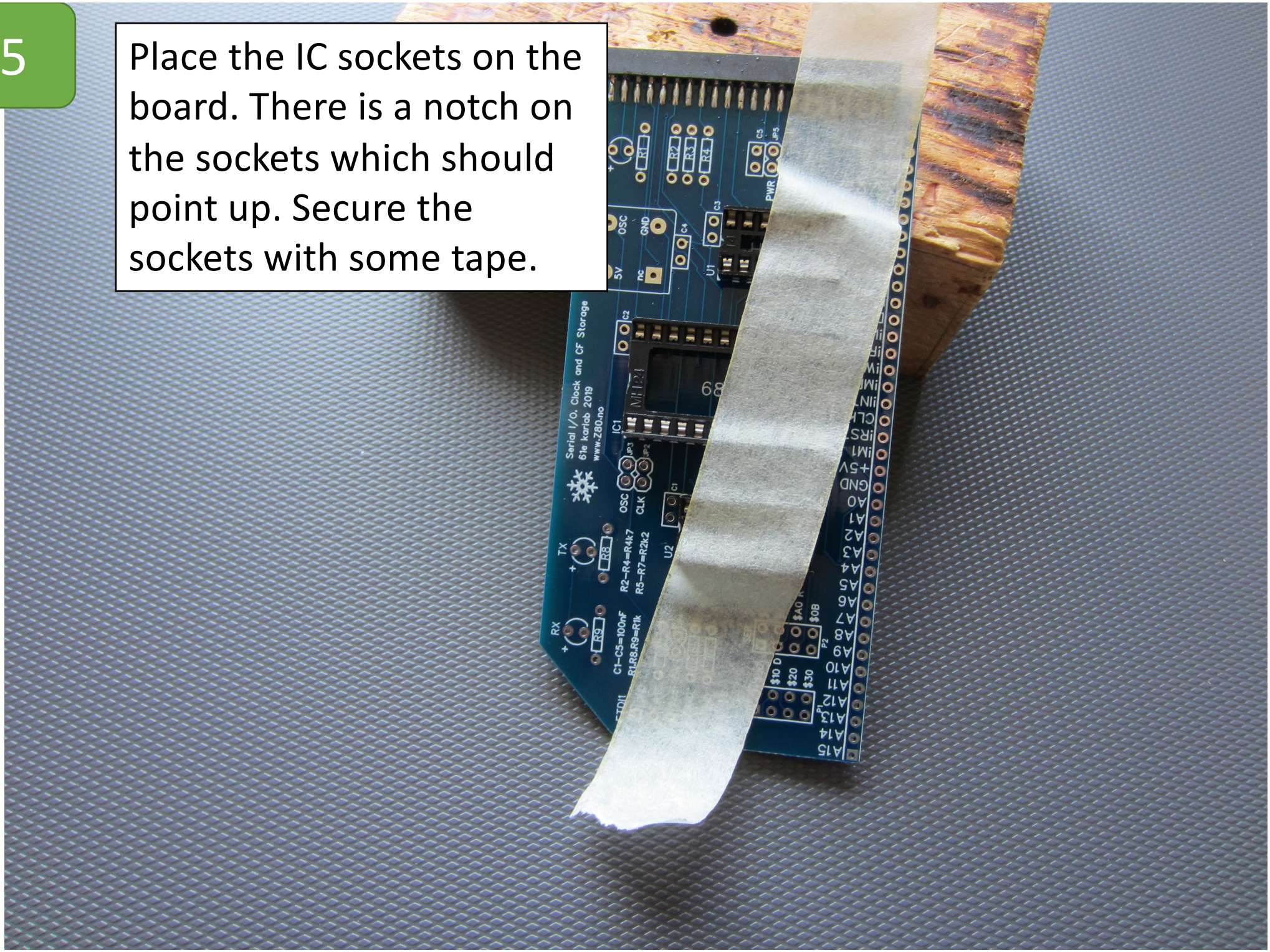

6

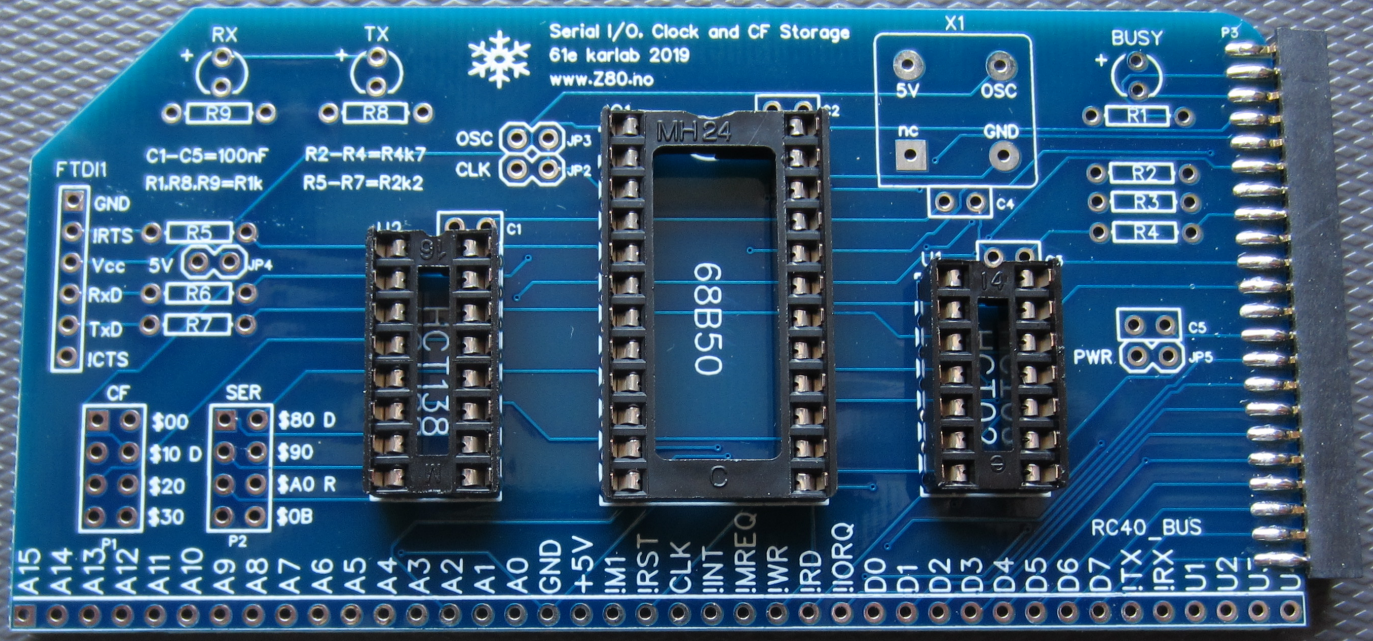

Turn the PCB and check that all the pins are protruding. Solder two pins in opposite corners of the socket. Check the sockets are even with the board before soldering the rest of the pins.

7

Mount the Oscillator, the 40pin bus connector and 6pin FTDI connector. Secure with tape and solder.

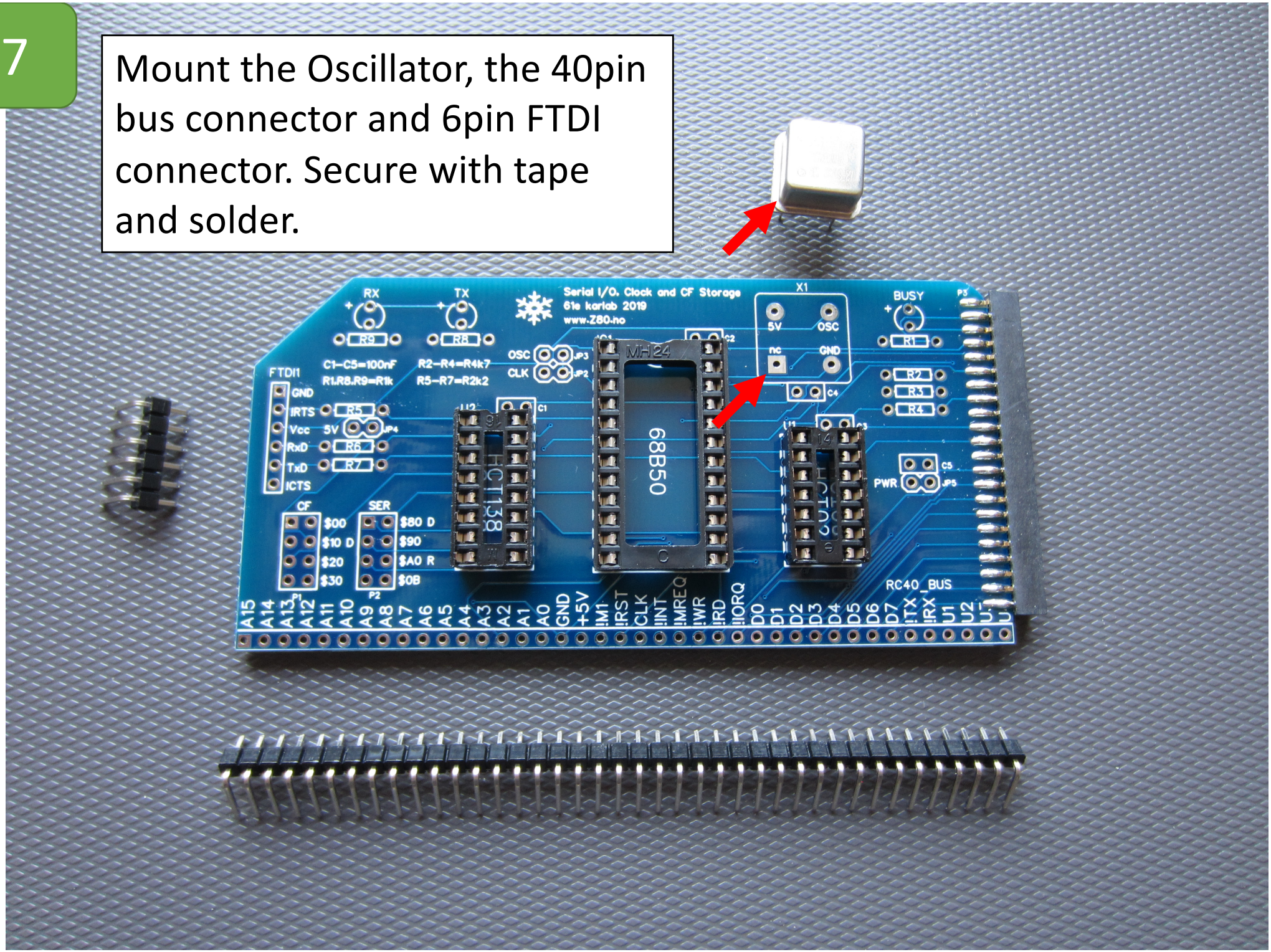

8

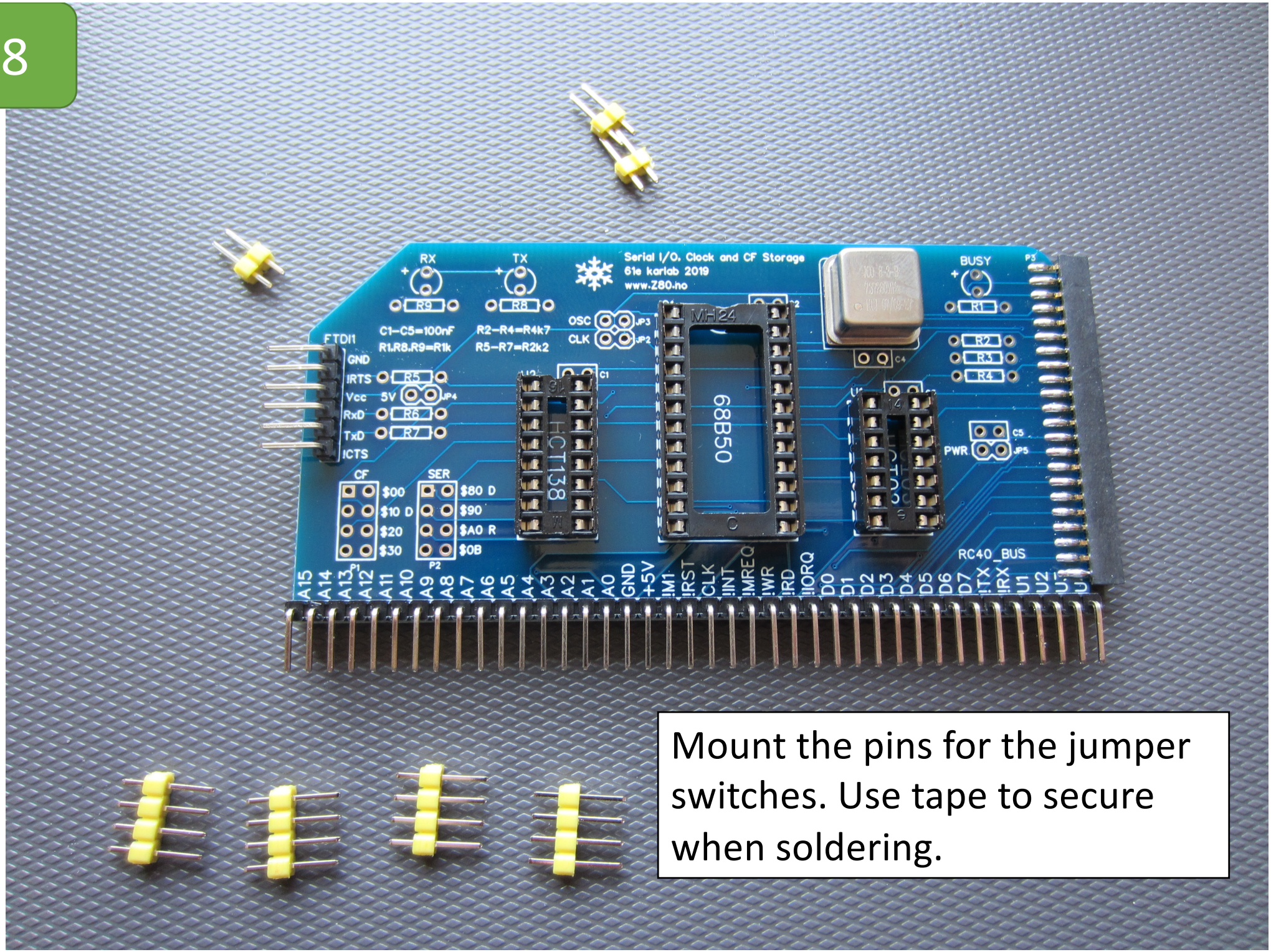

Mount the pins for the jumper switches. Use tape to secure when soldering.

9

Inspect that all pins are aligned.

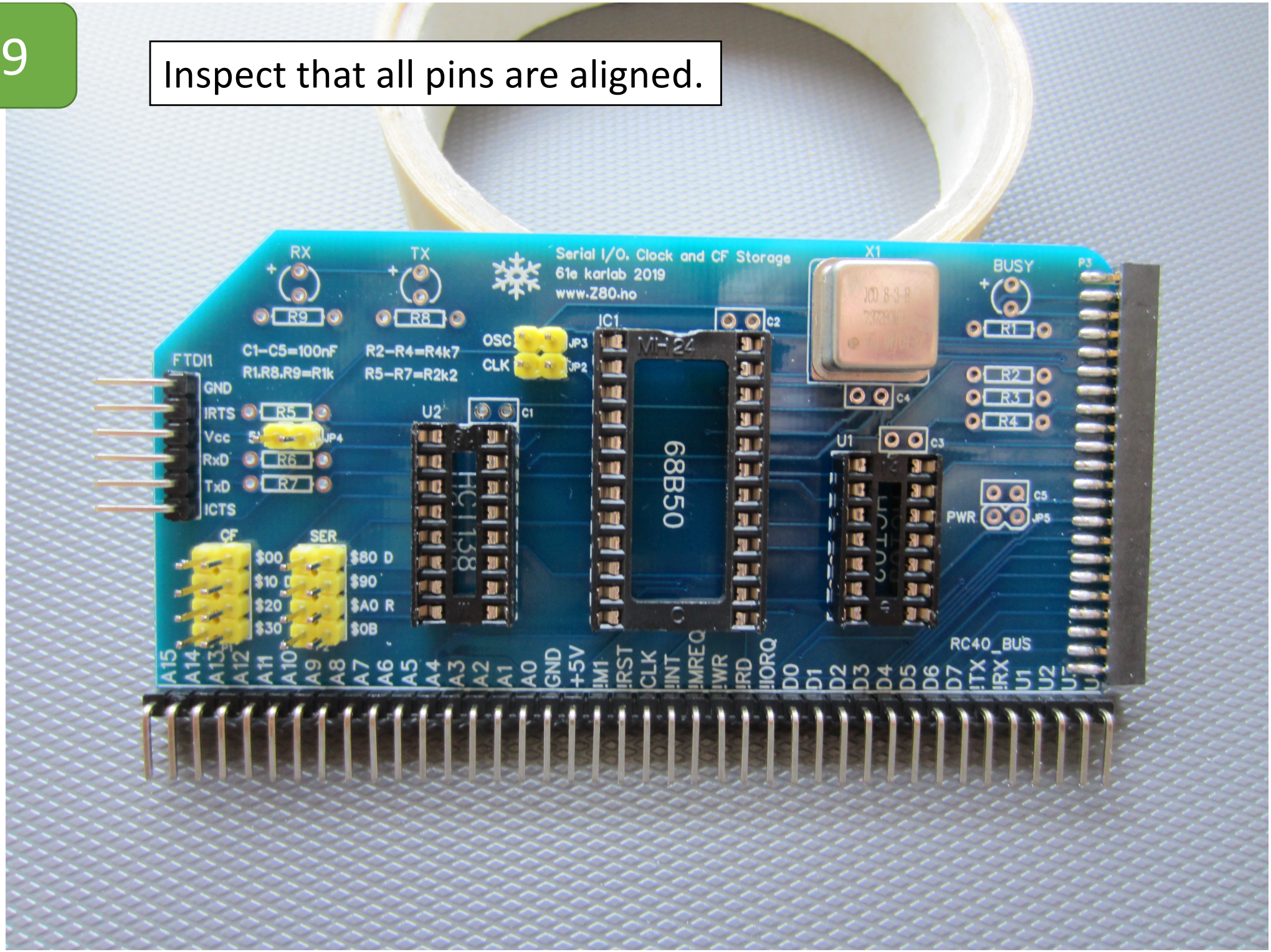

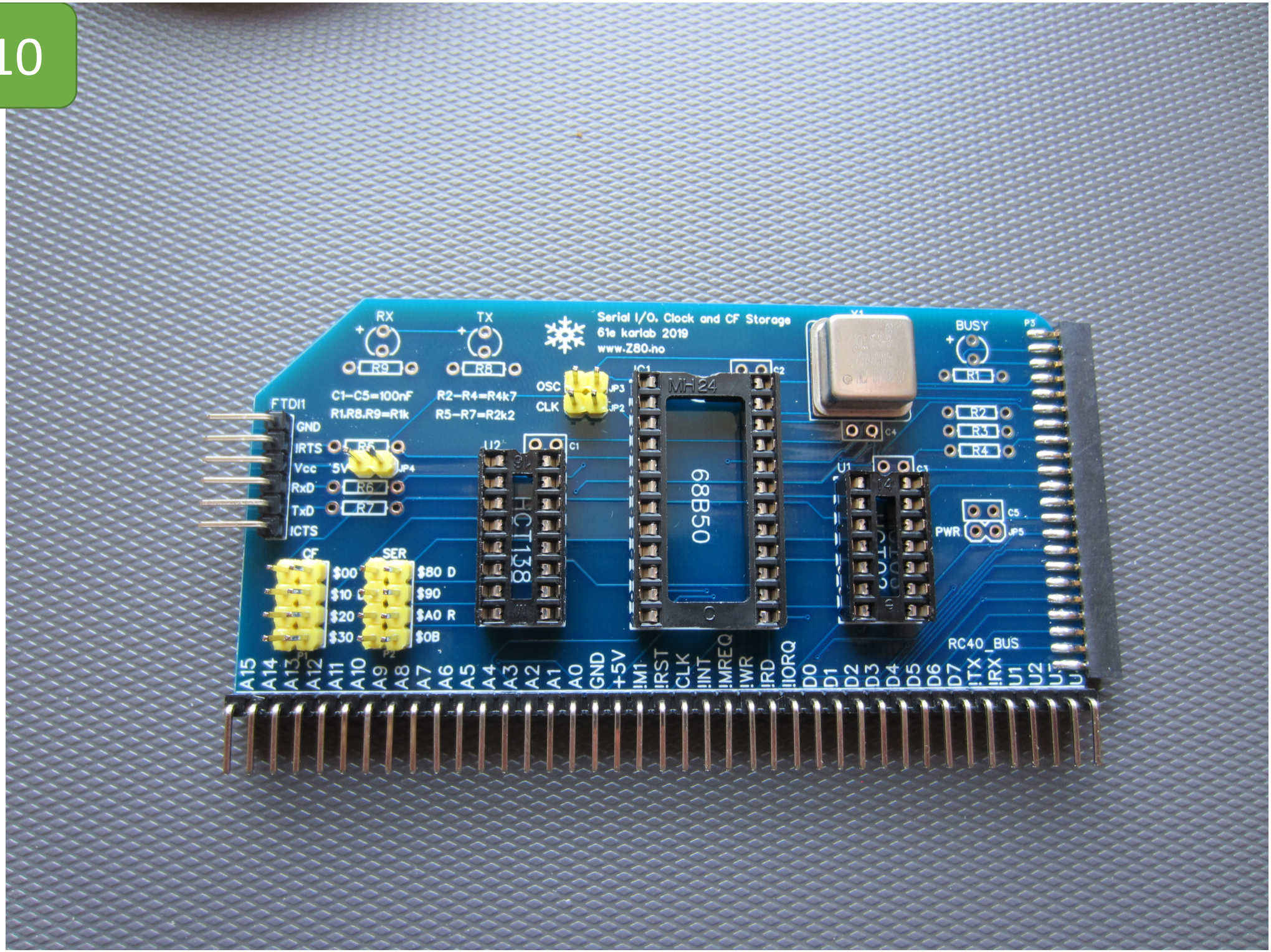
Serial I/O, Clock and CF Storage
61e karlab 2019
www.Z80.no
RX
TX
R9
R8
C1-C5=100nF
R1,R8,R9=R1k
R2-R4=R4k7
R5-R7=R2k2
OSC
CLK
JP3
JP2
FTDI1
GND
!RTS
Vcc
5V
JP4
RxD
TxD
!CTS
R5
R6
R7
U2
C1
HC138
IC1
C2
MH24
68B50
X1
C4
BUSY
P3
R1
R2
R3
R4
U1
C3
74
PWR
C5
JP5
CF
$00
$10
$20
$30
SER
$80 D
$90
$A0 R
$0B
RC40_BUS
A15 A14 A13 A12 A11 A10 A9 A8 A7 A6 A5 A4 A3 A2 A1 A0 GND +5V !M1 !RST CLK !INT !MREQ !WR !RD !IORQ D0 D1 D2 D3 D4 D5 D6 D7 !TX !RX U1 U2

11

C1-C5; Mount the capacitors, 100nF (104)

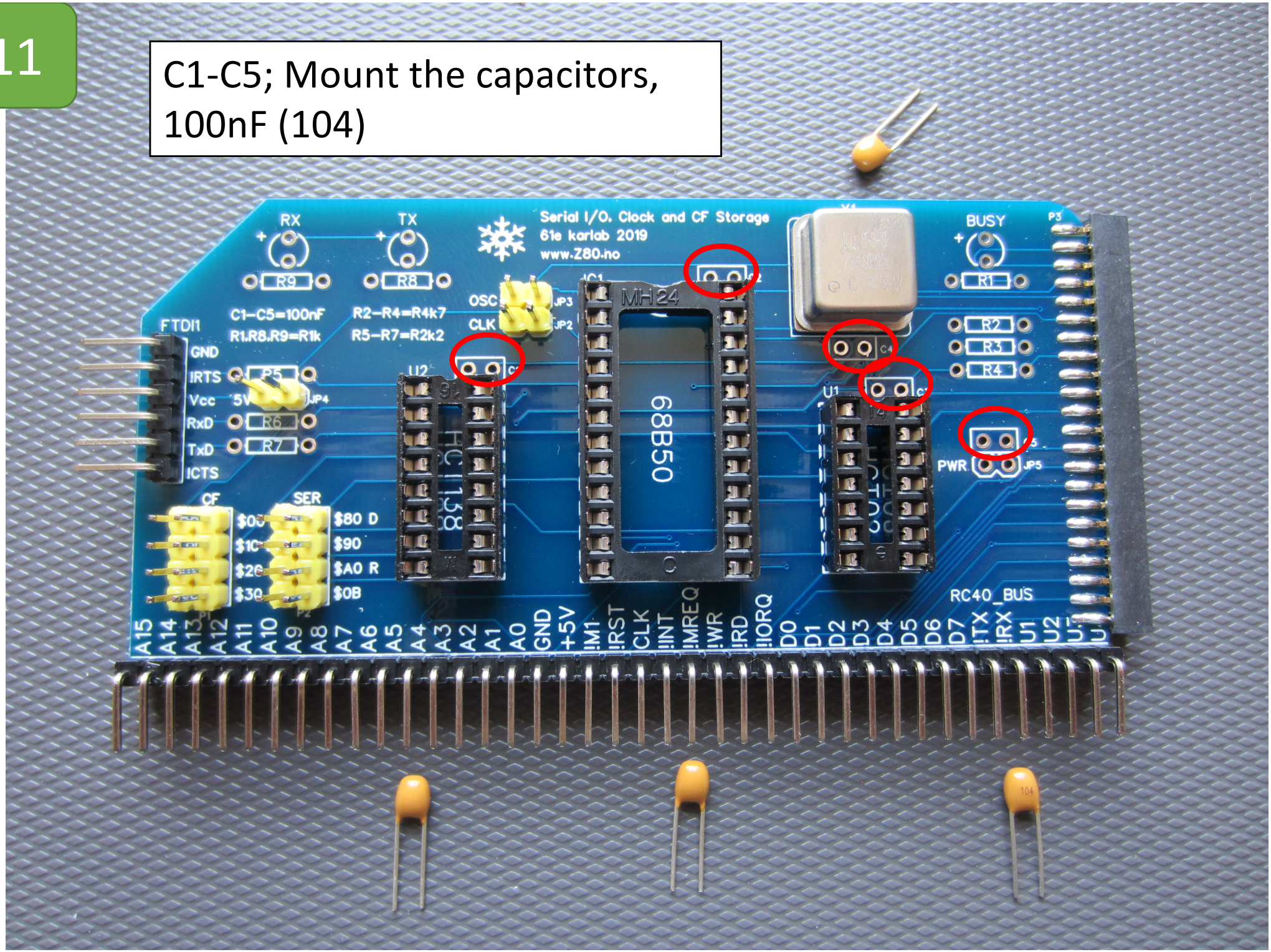

12

Again, secure with tape and solder.

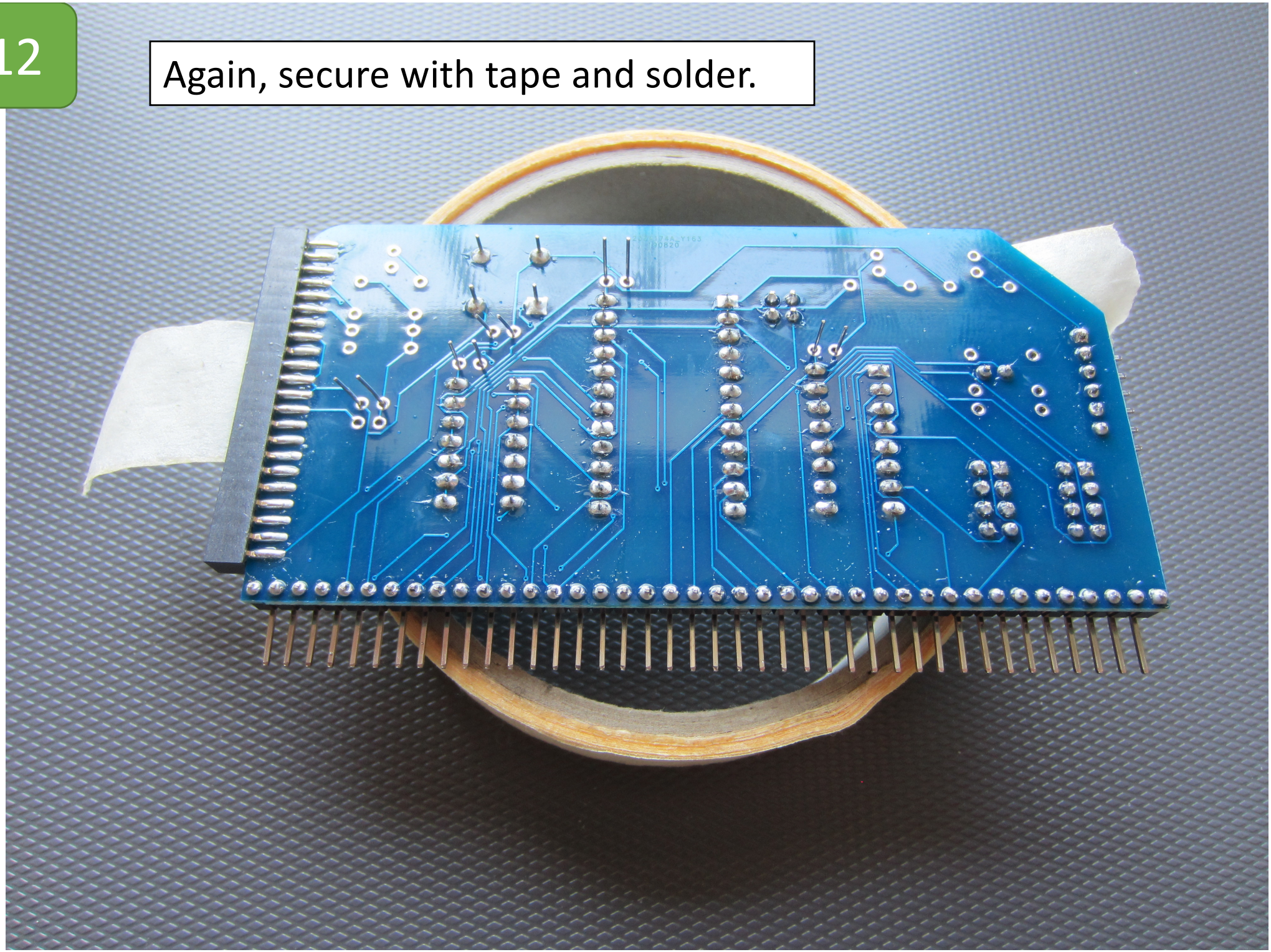

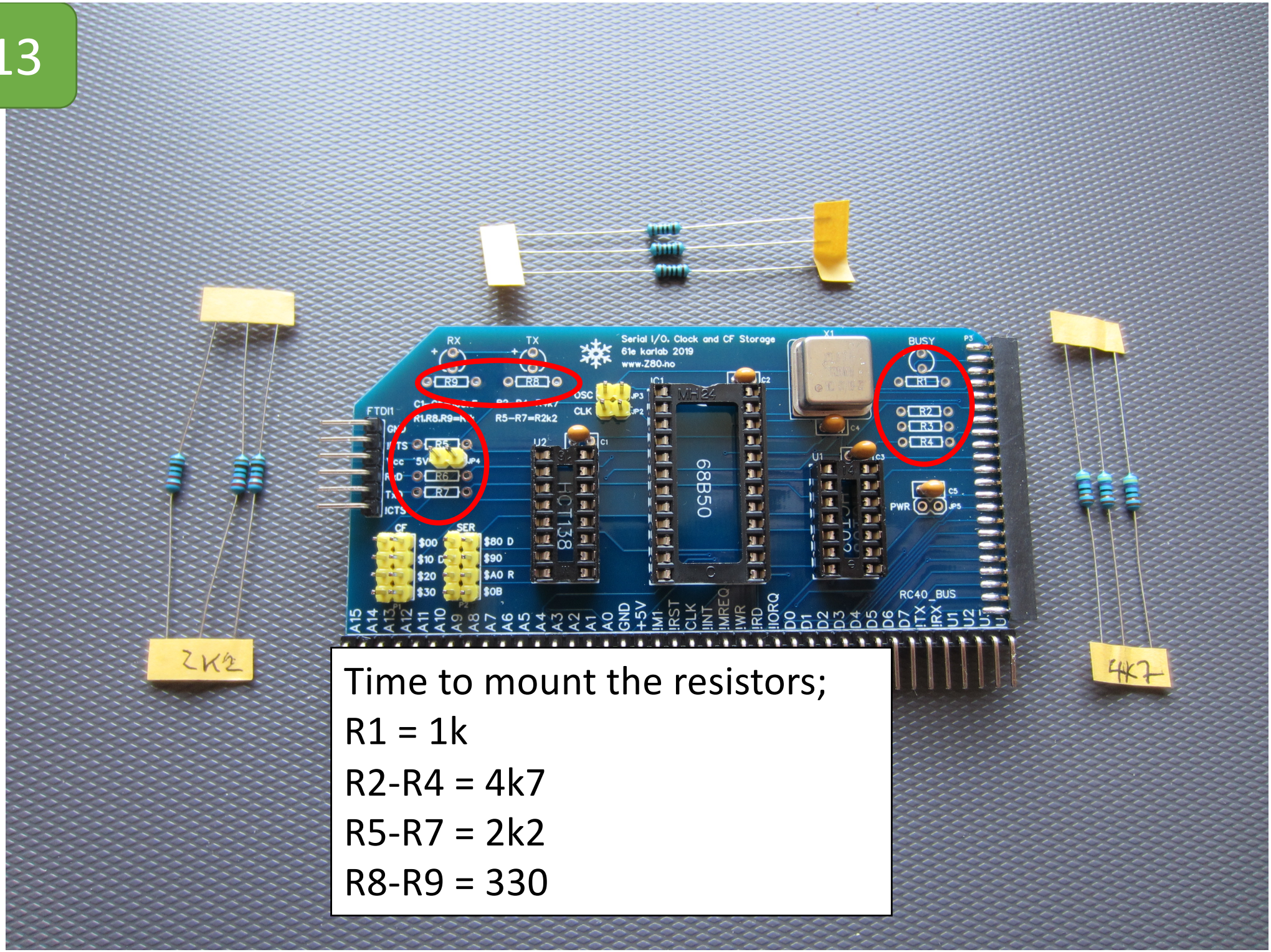

Time to mount the resistors;

R1 = 1k

R2-R4 = 4k7

R5-R7 = 2k2

R8-R9 = 330

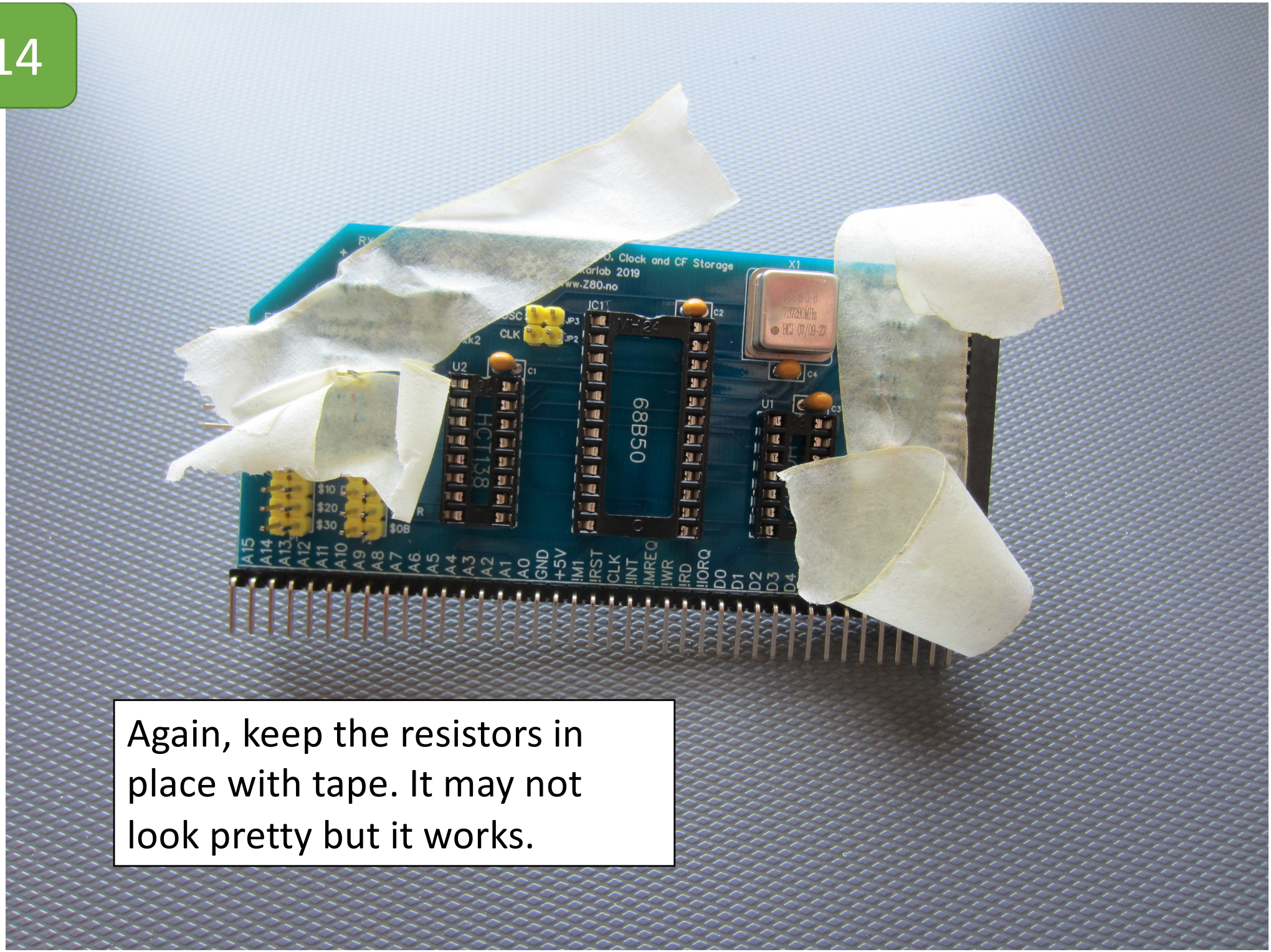

Again, keep the resistors in place with tape. It may not look pretty but it works.

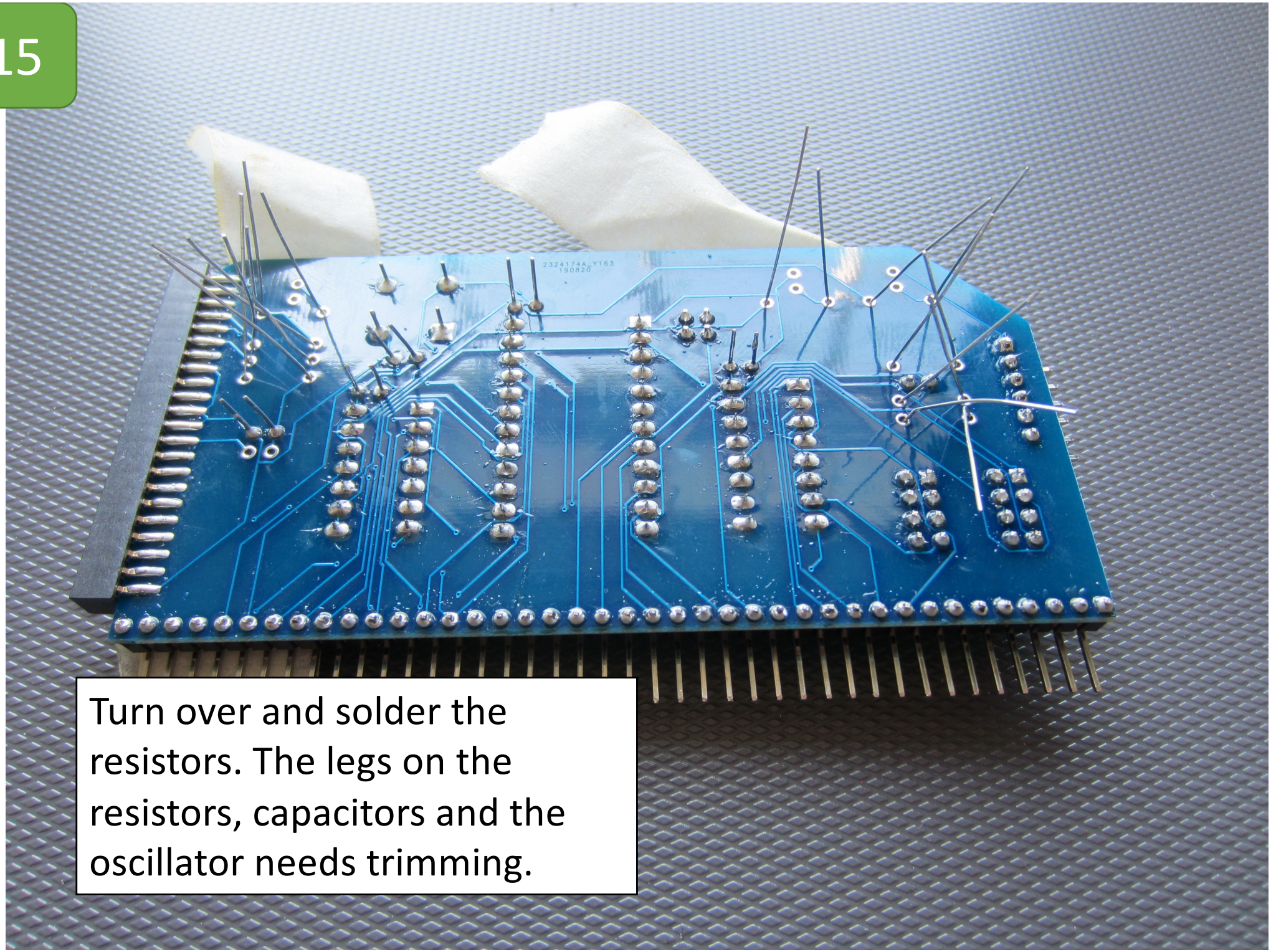

Turn over and solder the resistors. The legs on the resistors, capacitors and the oscillator needs trimming.

16

The polarity of the LEDs is important. The long leg is + and should be place where indicated. Important note below.

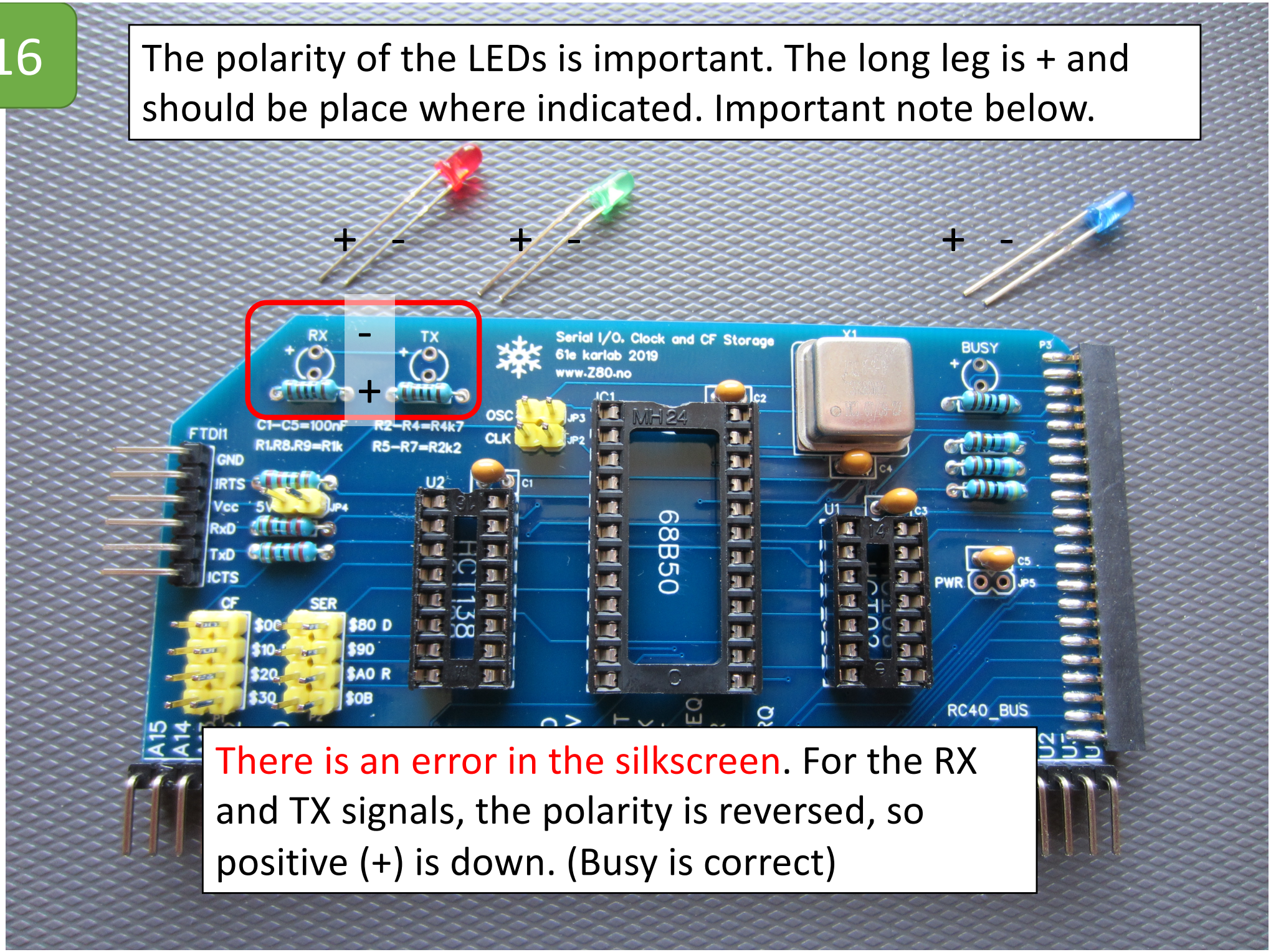

There is an error in the silkscreen. For the RX and TX signals, the polarity is reversed, so positive (+) is down. (Busy is correct)

The back side of the finished soldered module

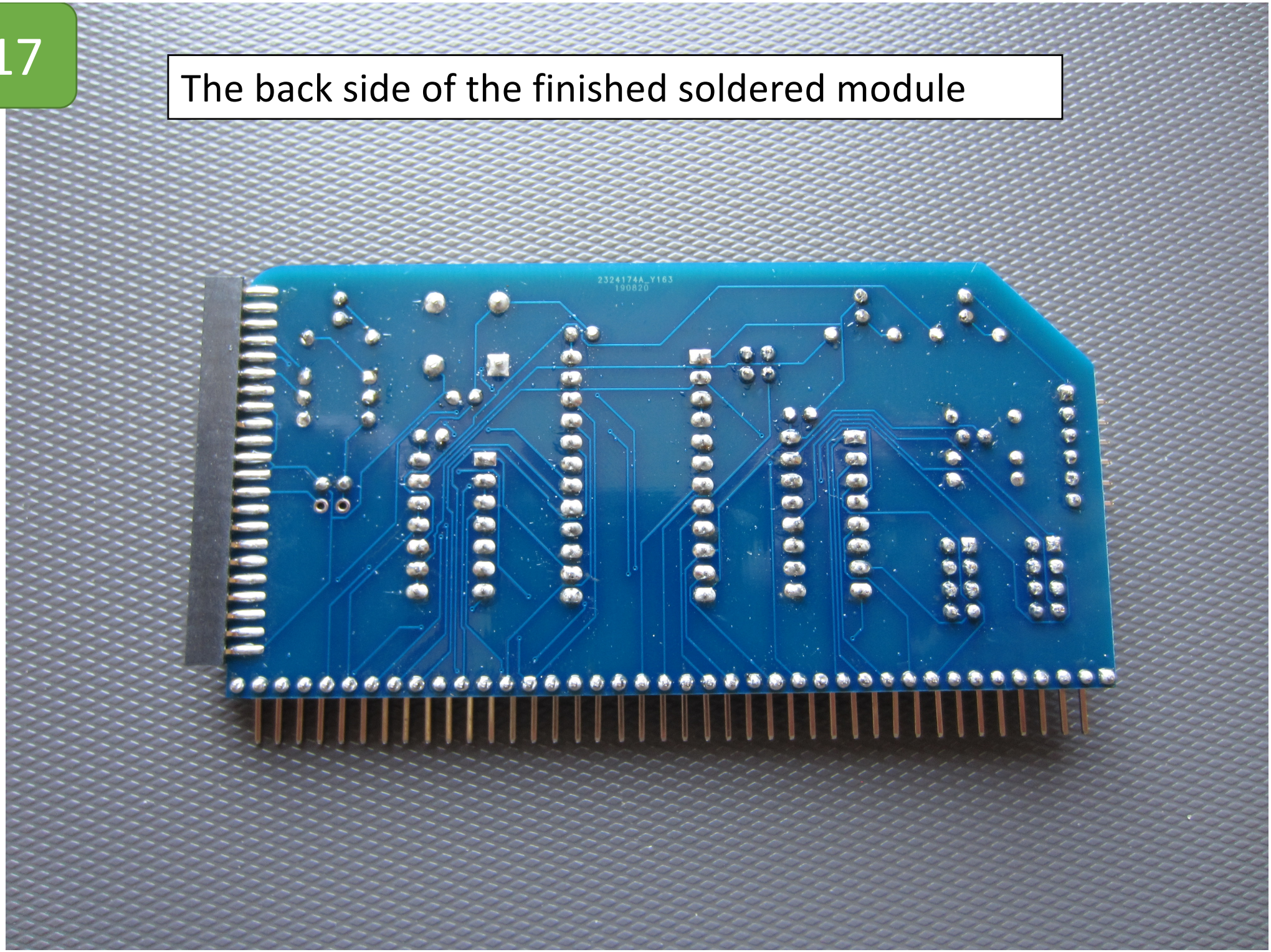

The front side of the finished soldered module

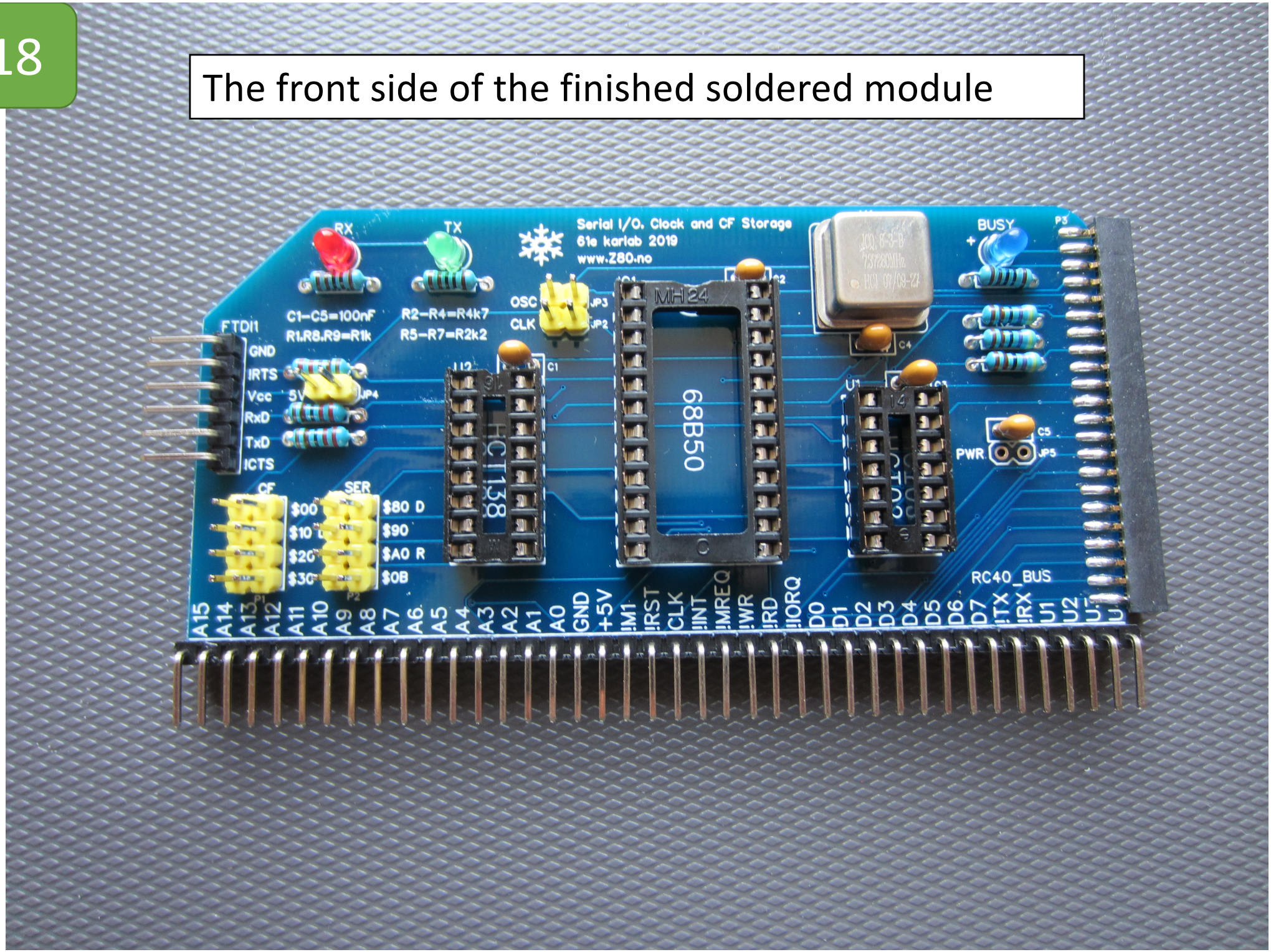

The finished assembled module with the ICs inserted. The notch on the ICs should point up.

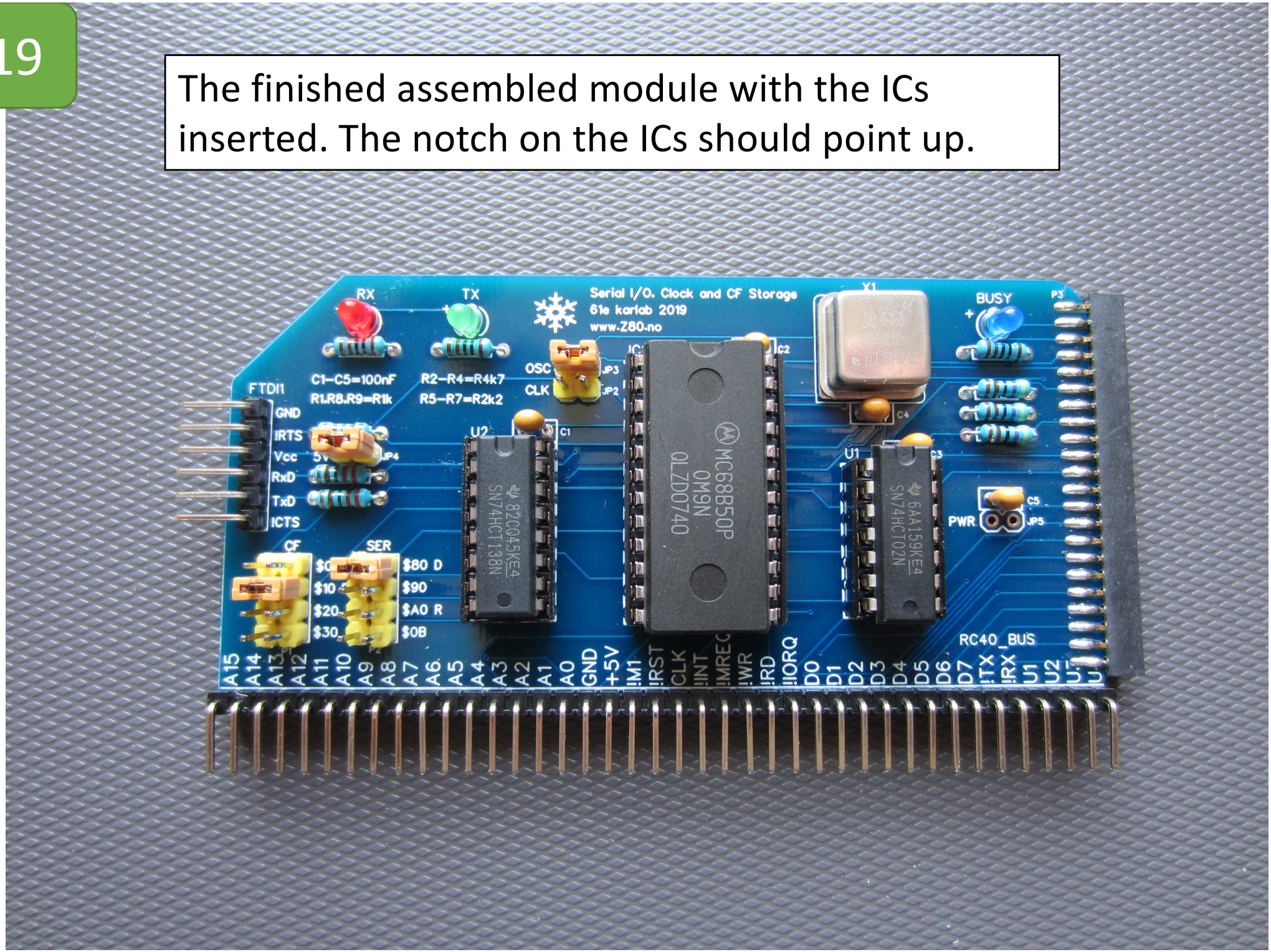

The last step, plug in the CF adapter card.

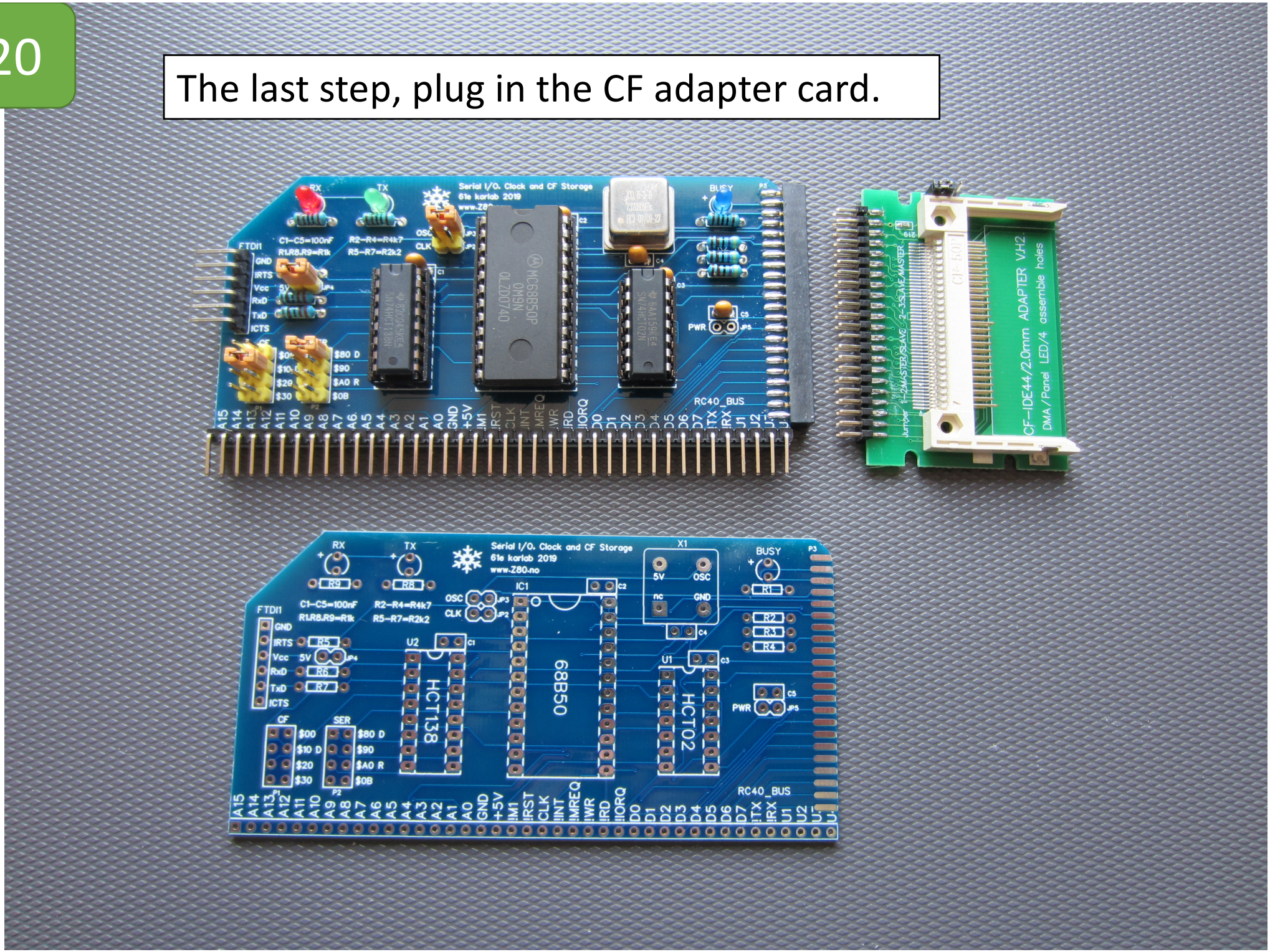

Schematics

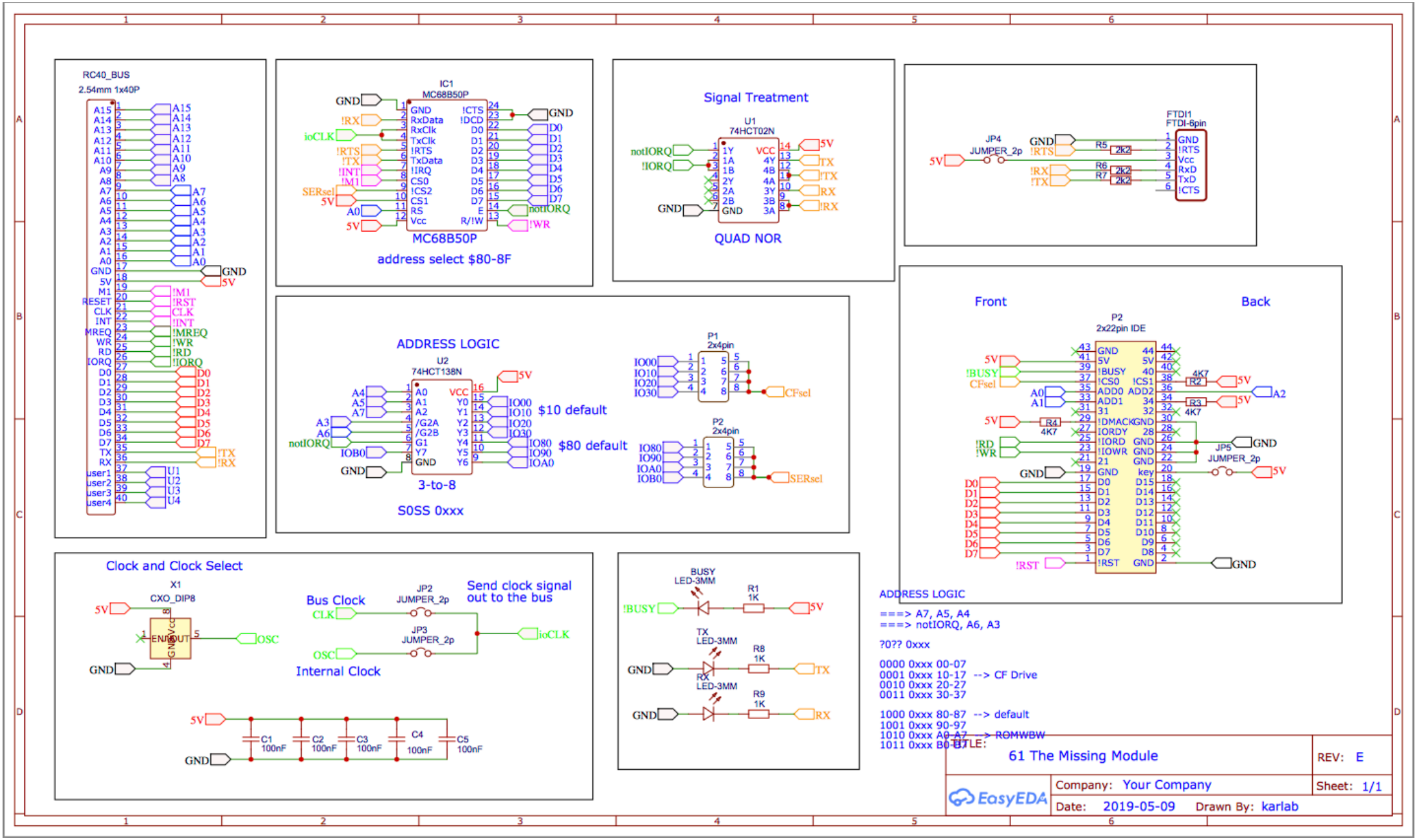
RC40_BUS
2.54mm 1x40P
IC1
MC68B50P
MC68B50P
address select $80-8F
Signal Treatment
U1
74HCT02N
QUAD NOR
JP4
JUMPER_2p
FTDI1
FTDI-6pin
ADDRESS LOGIC
U2
74HCT138N
3-to-8
S0SS 0xxx
P1
2x4pin
$10 default
P2
2x4pin
$80 default
Front
Back
P2
2x22pin IDE
JP5
JUMPER_2p
Clock and Clock Select
X1
CXO_DIP8
Bus Clock
JP2
JUMPER_2p
Send clock signal out to the bus
JP3
JUMPER_2p
Internal Clock
BUSY
LED-3MM
TX
LED-3MM
RX
LED-3MM
ADDRESS LOGIC
===> A7, A5, A4
===> notIORQ, A6, A3
?0?? 0xxx
0000 0xxx 00-07
0001 0xxx 10-17 --> CF Drive
0010 0xxx 20-27
0011 0xxx 30-37
1000 0xxx 80-87 --> default
1001 0xxx 90-97
1010 0xxx A0-A7 --> ROMWBW
1011 0xxx B0-B7
TITLE:
61 The Missing Module
REV: E
Company: Your Company
Sheet: 1/1
Date: 2019-05-09
Drawn By: karlab
EasyEDA

10. Test the module.

If it works..... Congratulation ☺.

If it doesn't work ☹.

- Check the jumpers are correct position, and the ICs and Oscillator are oriented correctly.
- Examine all the solder joints for missing joints, weak joints, solder bridges.
- Check no short-circuits on the bus
- Check continuity from bus to ICs. (follow the traces in the schematic)
- Terminal port setup is correct (115200, 8, N, 1) Hardware flow control (RTS/CTS)

I have made some trouble shooting guides on my homepage: www.Z80.no

- If you are stuck and can't find the fault, contact me PM.
- If you screw up during the assembly process, contact me PM.

karl@brokstad.no